Sintra Forte
Body Dimensions

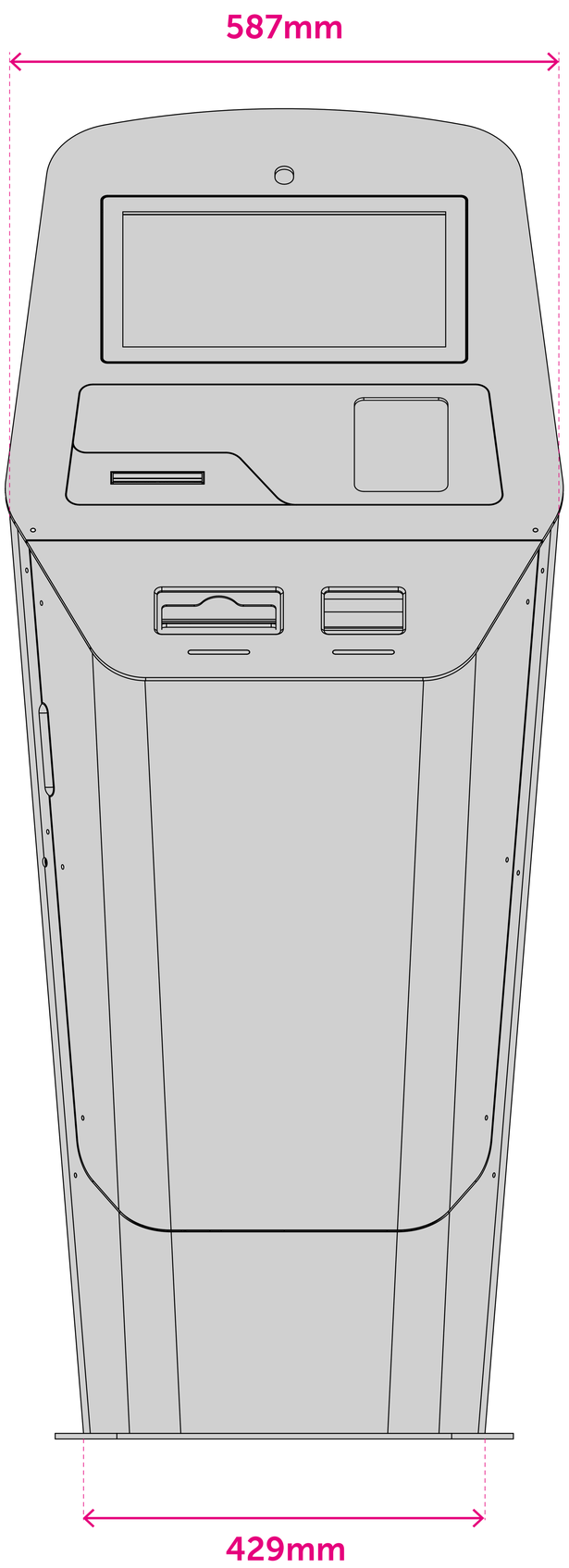

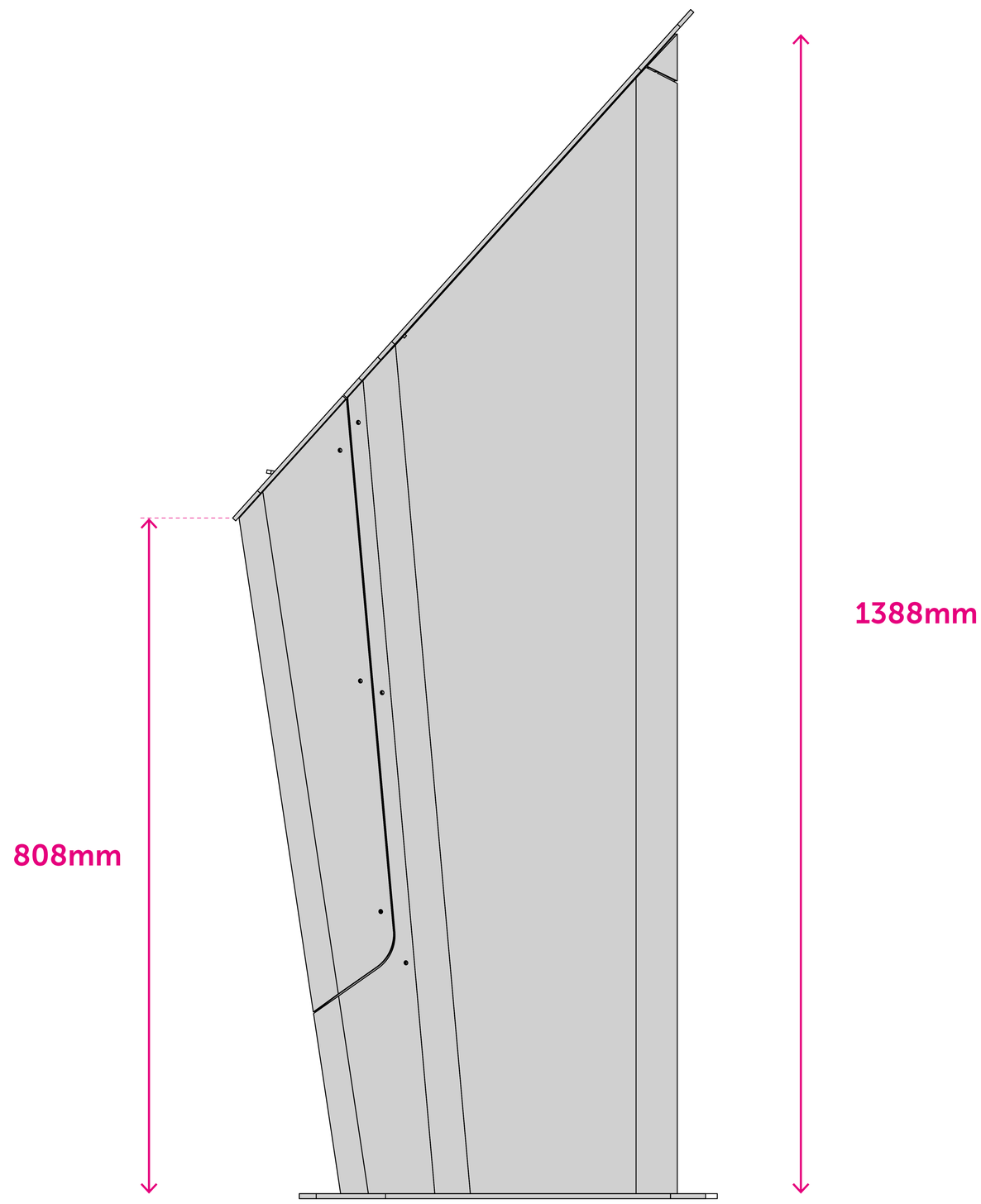

LAMASSU
lamassu.is

Sintra Forte
Top Dimensions

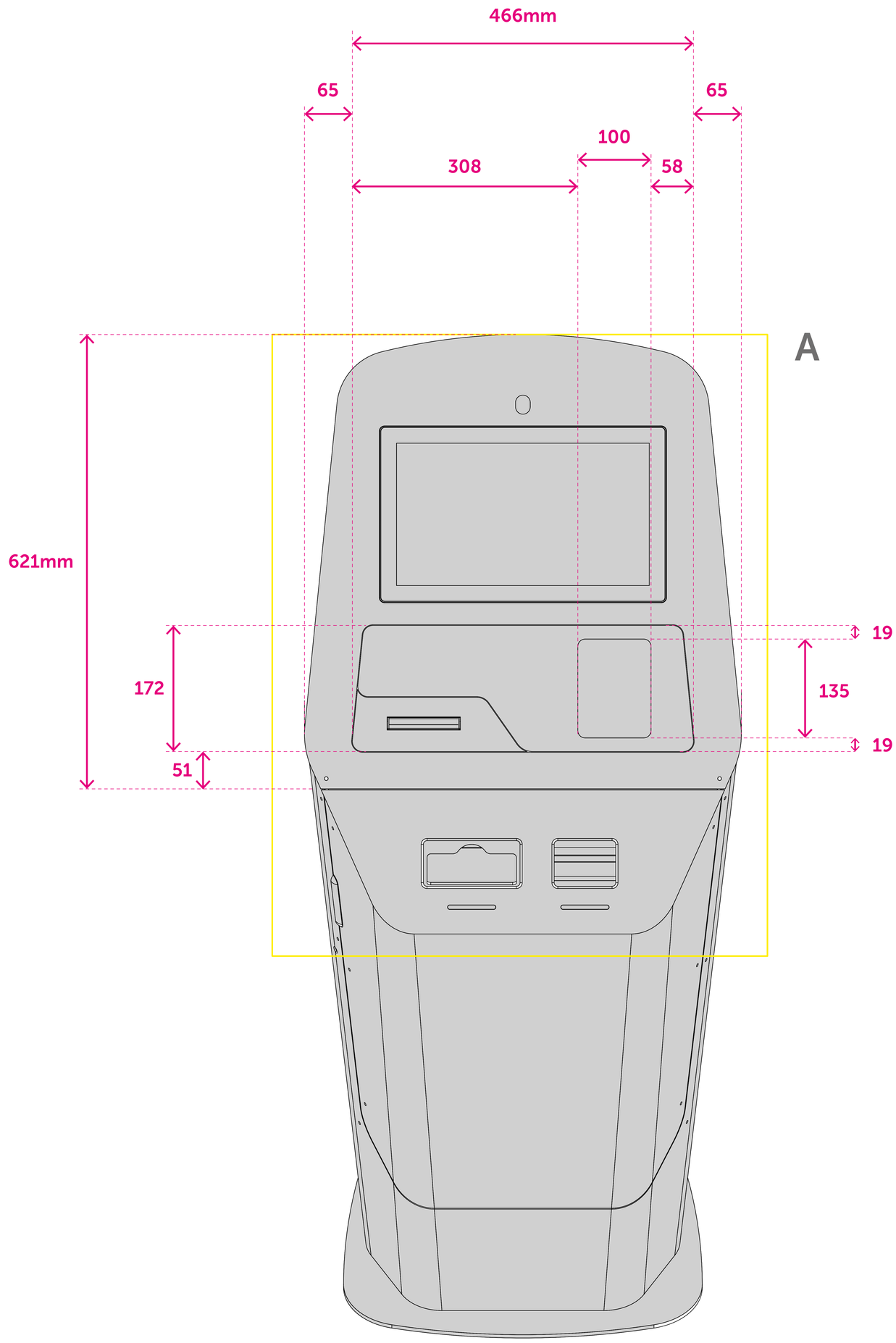

LAMASSU
lamassu.is
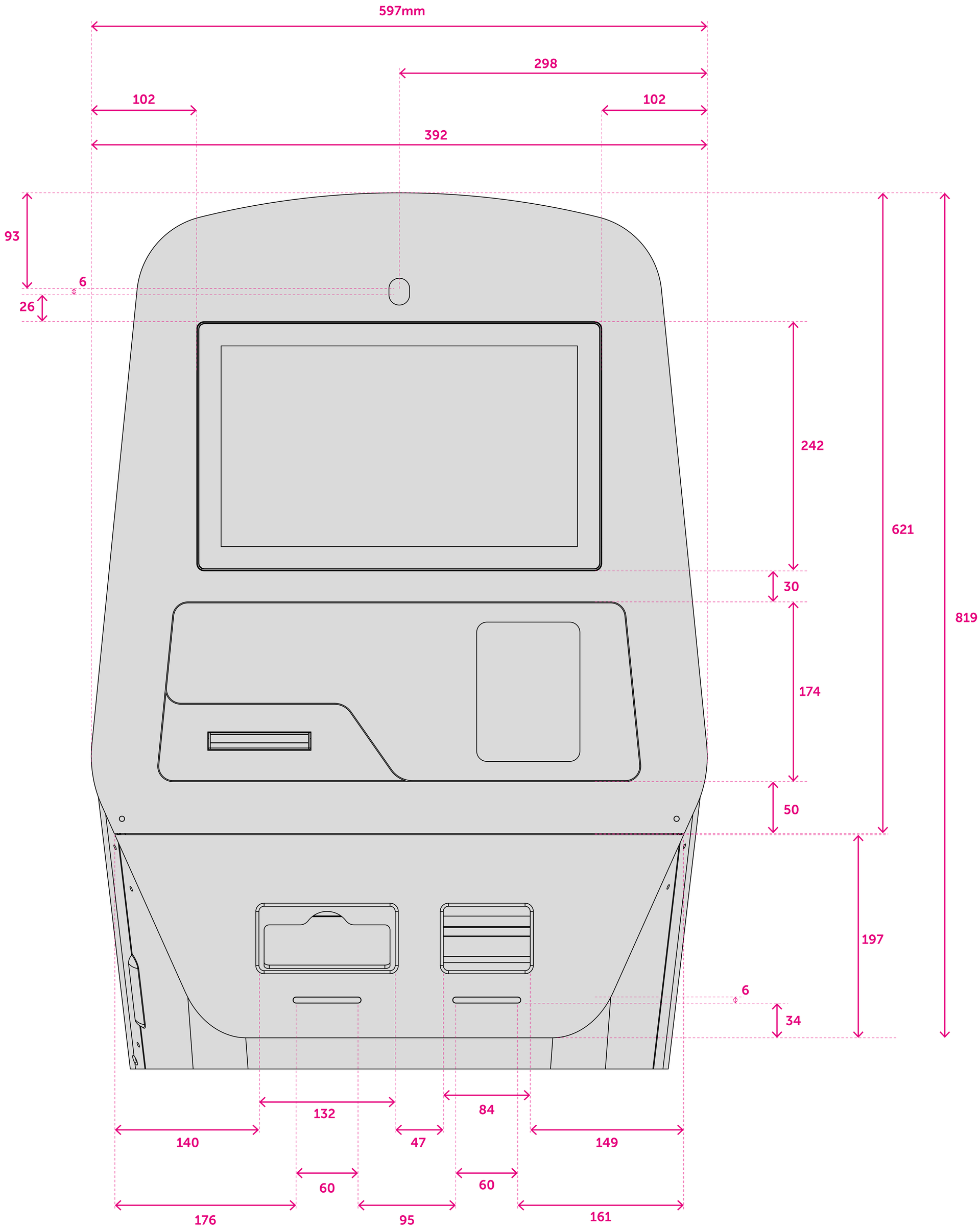
Sintra Forte
Top Dimensions (detail A)
Scale 1:5